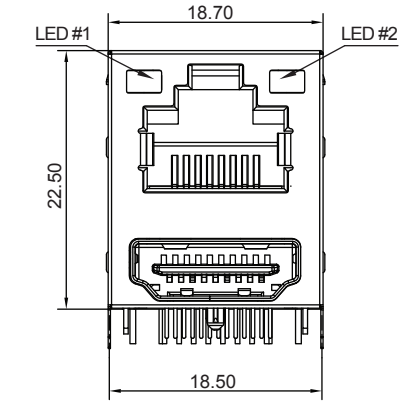

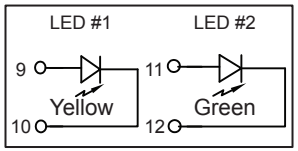

Single Color LED

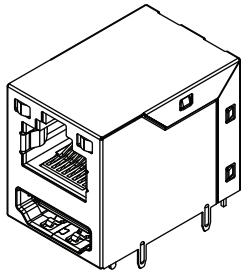

Isometric View

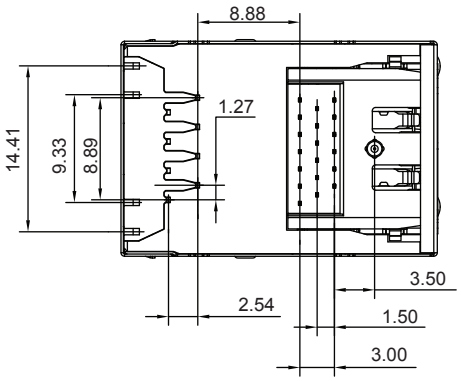

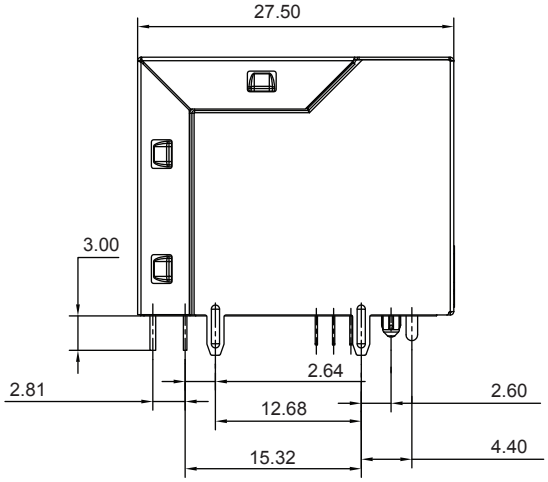

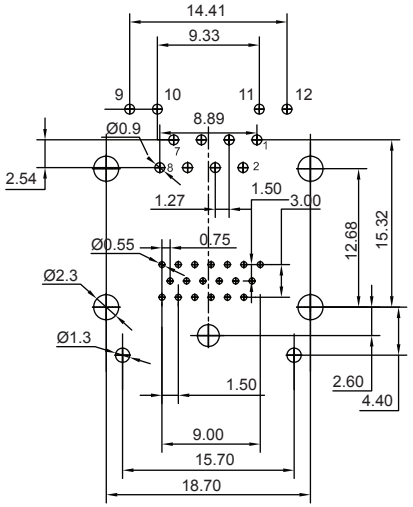

Recommended PCB Layout

MECHANICAL:
DURABILITY: 750 Mating Cycles Min.
OPERATING TEMPERATURE: -45°C to +80°C

ELECTRICAL:
CURRENT RATING: 1.5A Max.
CONTACT RESISTANCE: 30 milliohm Max.
INSULATION RESISTANCE: 500 Megaohm Min.
DIELETRIC WITHSTANDING VOLTAGE:
1000 VAC RMS 50 Hz. or 60 Hz. 1 Min.

MATERIAL:
INSULATOR: PBT (UL94V-0)
COLOR: Black
CONTACT: .45mm Phosphor-Bronze
PLATING: Specified Gold Thickness in Contact Area;
Au Flash on Solder Tail; All over 50u" NIckel Subplate
SHELL: Nickel Plated Copper Alloy

HOW TO ORDER:

U A 0 0 - 0 1 8 0 - Y G X - Z

TAB OPTION:
1 - w/OUT EMI SPRING TABS

USB CONNECTOR:
8 - 1 HDMI CONNECTOR

RJ-45 CONNECTOR:
0 - STANDARD (8P8C)

LED 1: YELLOW

LED 2: GREEN

SELECTIVE PLATING:
6 - Au FLASH CONTACT AREA
7 - 10u" Au CONTACT AREA
8 - 15u" Au CONTACT AREA
9 - 30u" Au CONTACT AREA

RoHS COMPLIANT

Rev		Drawn	Checked	Approved	Date
0	Issued	B.S.	S.M.	S.M.	08/15/18

SMP TECHNOLOGY, INC.

Combo Jack; RJ45 w/ LED + HDMI Connector, No EMI Tabs

SCALE:n/a
TOL. DEC. .X +/- 0.35 .XX +/- 0.25 .XXX +/- 0.10 ANGLE +/- 0°.30' UNIT: mm

P/N: UA00-0180-YGX-Z